Heil Steel Manhole Assembly
(OBSOLETE)

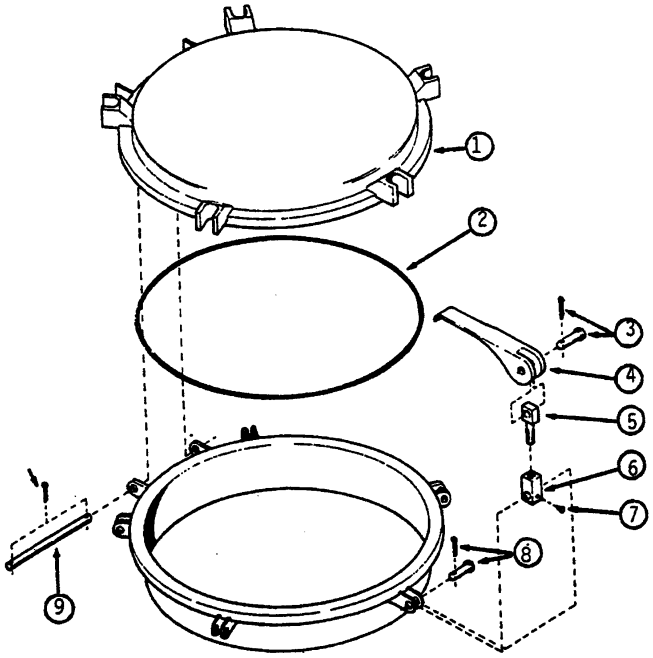

REF.	PART NO.	DESCRIPTION
1	12-6696	MANHOLE Assy (steel)
2	22-2583	MANHOLE Gasket
3	48-3063	CAM HINGE PIN
4	70-857	CAM
5	47-1284	ADJUSTING BOLT
6	47-1285	ADJUSTING NUT
7	47-1221	LOCK SCREW
8	48-3063	ADJ. Nut Hinge Pin
9	48-2890	HINGE PIN
10	NSS	COTTER PIN 1/8 x 3/4

HOW TO IDENTIFY

- LID is fabricated Steel
- 5 Hold down assys.
- 9½″ Cast Iron Cam Levers
- Gasket Glues in Lid
- ½″ Dia. O-Ring style Gasket
- Machined Steel I Bolt and Adjusting Nut

Heil Manhole Assembly

(OLD STYLE)

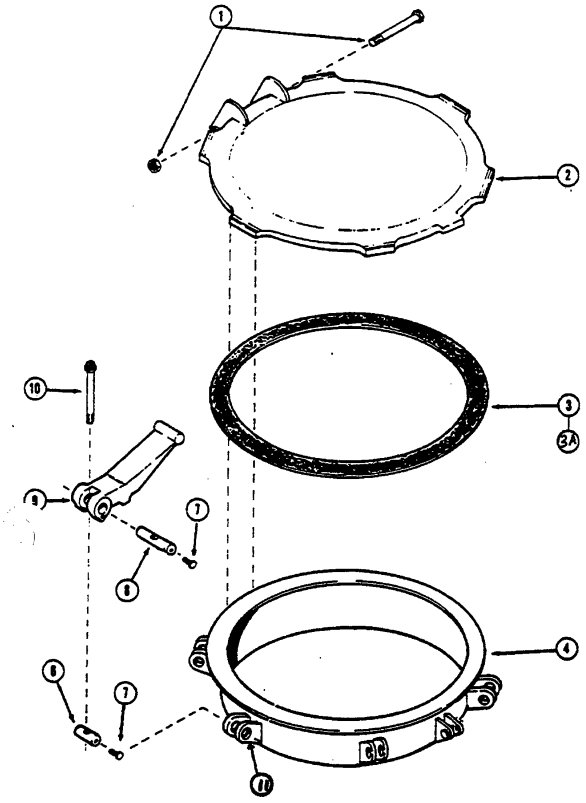

REF. NO.	PART NO.	DESCRIPTION
1	509.....	HINGE BOLT
2	X1520.....	COVER w/gasket
3	134BN.....	GASKET, black
3A	134BNW.....	GASKET, white
4	NSS.....	WELD COLLAR
5	131.....	SAFETY LATCH (not shown)
6	803.....	NECK PIN
7	805.....	LOCKING BOLT
8	802.....	CAM PIN
9	801.....	CAM
10	135.....	CAM BOLT
11	508A.....	HINGE EAR

HOW TO IDENTIFY

- X1520 Cast Between Hinge Ears
- 801 Cast onto Cam
- Die Cast Aluminum Cover
- Gasket fits into Groove in Lid
- 6 Hold Downs
- Cams Adjust with 12 Point Bolt

Heil Manhole Assembly

(NEW STYLE)

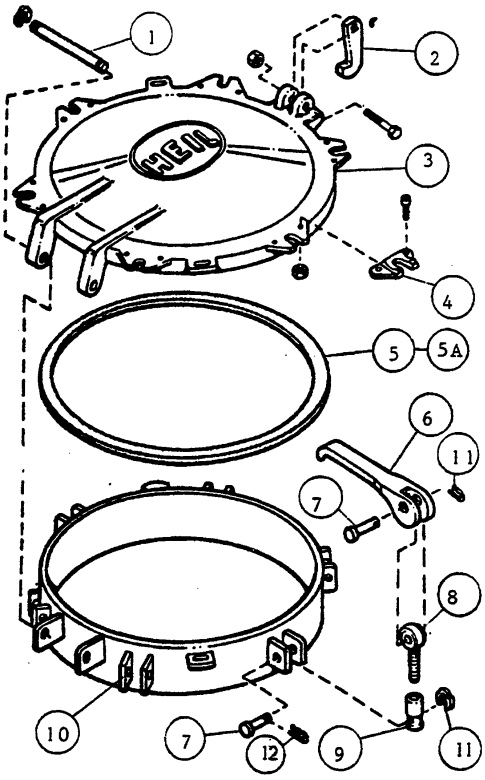

REF.	PART NO.	DESCRIPTION
1	509P	HINGE PIN
2	131	SAFETY LATCH
3	2016AC	COVER, with wear plates & Gaskets
4	826	WEAR PLATE, w/screws
5	134BN	GASKET, black
5A	134BNW	GASKET, white
6	821	CAM
7	822	CAM PIN
8	824	ADJUSTING BOLT
9	823	ADJUSTING NUT
10	828A	HINGE EAR, alum.
11	825	RETAINING RIN
12	829S	HITCH PIN S/

HOW TO IDENTIFY

- 2016 Cast Between Hinge Ears
- Bolt on Wear Plates
- 6 Cast Iron Hold Down Assys.
- Die Cast Aluminum Cover
- 821 Cast onto Cam
- 3/8″ x 1″ Rectangular Gasket

Fruehauf

MANHOLE ASSEMBLY 20" FULL OPENING (Alum & Steel Tank)

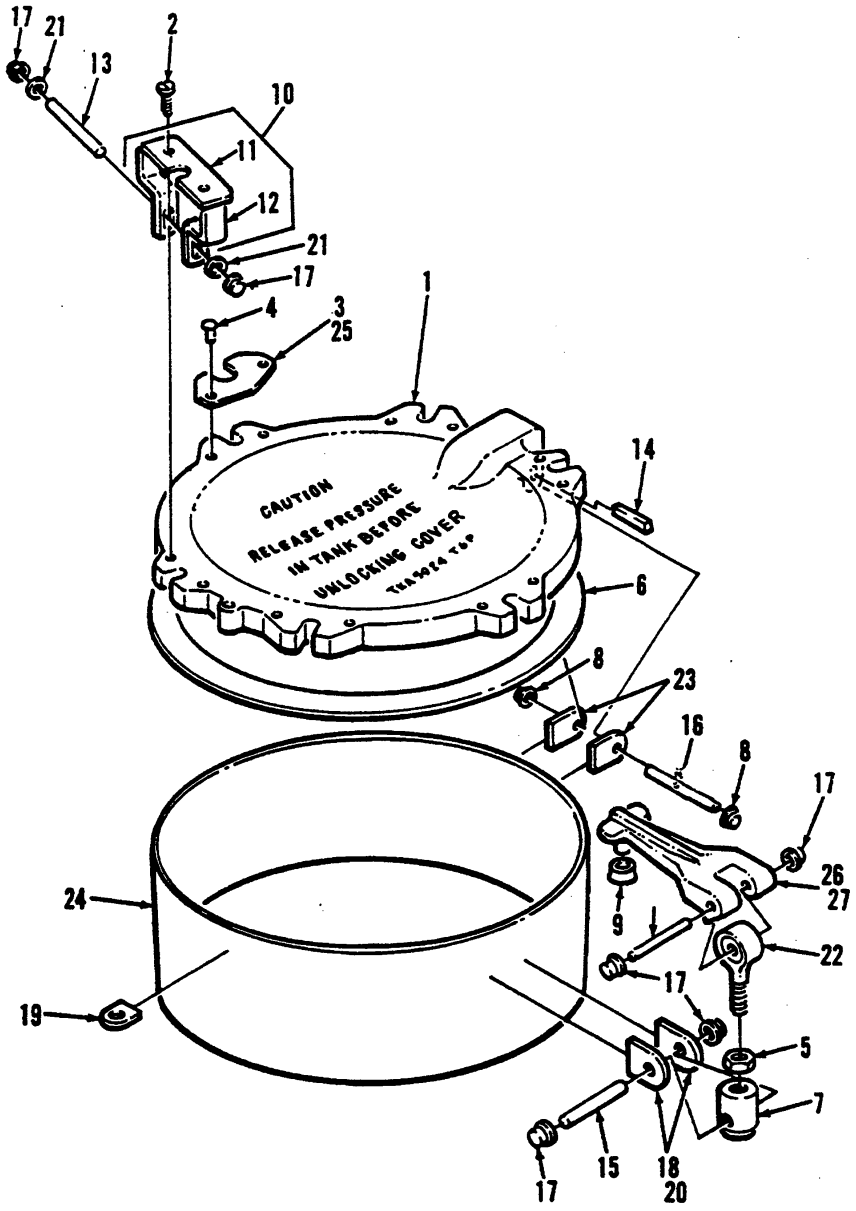

INCLUDE SERIAL NUMBER WHEN ORDERING REPLACEMENT PARTS

Fruehauf

FIG. & INDEX NO.	FRUEHAUF PART NO.	DESCRIPTION	USABLE ON CODE	QTY. REQ.
10 -	TKB 0562 05	. MANHOLE ASSEMBLY, 20" Full Opening		
- 1	TKA 5924 T6	. . COVER, Aluminum 20" Cast Manhole		1
- 2	GM 447827	. . SCREW, Panhead x 3/4" Lg. Cad. Plated		2
- 3	TKA 8242	. . WEAR PLATE, 16 Ga. Steel Cad. Plated		5
- 4	VKA 6606	. . RIVET, 5/32" Dia. x 7/16" Lg.		10
- 5	GM 219758	. . NUT, 3/4"-16 Hex Jam		1
- 6	VKA 5927	. . GASKET, (Rubber, Duro SBR Compound), 3/8" x 20 7/8" O.D. x 19 7/8" I.D.		1
	VKA 5928	. . GASKET, (Neoprene) 3/8" x 20 7/8" O.D. x 19 7/8" I.D.		1
	TKA 8586	. . GASKET, (Non-Toxic White Neoprene), 3/8" x 20 7/8" O.D. x 19 7/8" I.D.		1
- 7	TKA 3222	. . SWIVEL, Cast Iron 3/4"-16 x 1 3/4"		1
- 8	ZKA 2260	. . NUT, 5/16" Push #375011 Palnut		2
- 9	VKA 3318	. . TIP, Black Stool #152 Altantic India		1
-10	TWA 8864-F	. . SAFETY CATCH ASSEMBLY		1
-11	TKA 0181	. . BAR, 3/16" x 2" wide x 5 5/8" Lg. H.S.L.A.		1
-12	TKA 0179	. . BAR, 3/16" x 1 1/4" Wide, H.S.L.A.		2
-13	TKA 8723	. . CLAMP CAM PIN, 1/2" Dia. x 3 1/2" Lg. Stl. Cad. Pl.		1
-14	TKA 7566	. . RUBBER STRIP, 1/4" x 1 1/4" Sq. x 2 3/4" Lg.		1
-15	TKA 8724	. . SWIVEL PIN, 1/2" Dia. x 3" Lg. Steel Cad. Pl.		5
-16	TKA 2764	. . HINGE PIN, 5/16" Dia. x 4" Lg. Steel Cad. Pl.		1
-17	ZKA 2262	. . PUSH NUT, 1/2" #PW 500015 Palnut		24
* -18	TKA 0199	. . CLAMP LUG NUT, 1/4" Fabr. H.S.L.A. 1" x 1 1/2"		1
-19	KB 0757030 23E	. . SEAL CLIP, Fabr. H.S.L.A.		1
* -20	TKA 0199	. . HINGE LUG ALTERNATE, 1/4" Fabr. H.S.L.A., 1 1/2" x 4 9/16"		2
-21	GM 120396	. . WASHER, 1/2" Flat S.A.E.		2
-22	TKA 1214A	. . ROD END, 3/4"-16 x 3 1/2" Lg. Cad. Pl.		1
* -23	TKA 0199	. . HINGE LUG, 1/4" Fabr. H.S.L.A.		2
** -24	TKA 0205	. . COLLAR, 1/4" x 6" High x 63 5/8" Lg. H.S.L.A.		1
-25	TKA 6082	. . WEAR PLATE, 16 Ga. Stn. Stl. 304-2B, 2 1/8" x 4" Lg. (ALTERNATE)		5
-26	TKA 8731	. . CLAMP ASSEMBLY, 3 1/2" Bolt Cad. PL.		6
-27	TKA 0714	. . CLAMP CASTING		1
		ALUMINUM TANK ONLY		
*	TKA 0163	. . LUG, .375" Size		—
**	STK 20162-1	. . COLLAR, .375"		—

INCLUDE SERIAL NUMBER WHEN ORDERING REPLACEMENT PARTS

Butler

STYLE MANHOLE

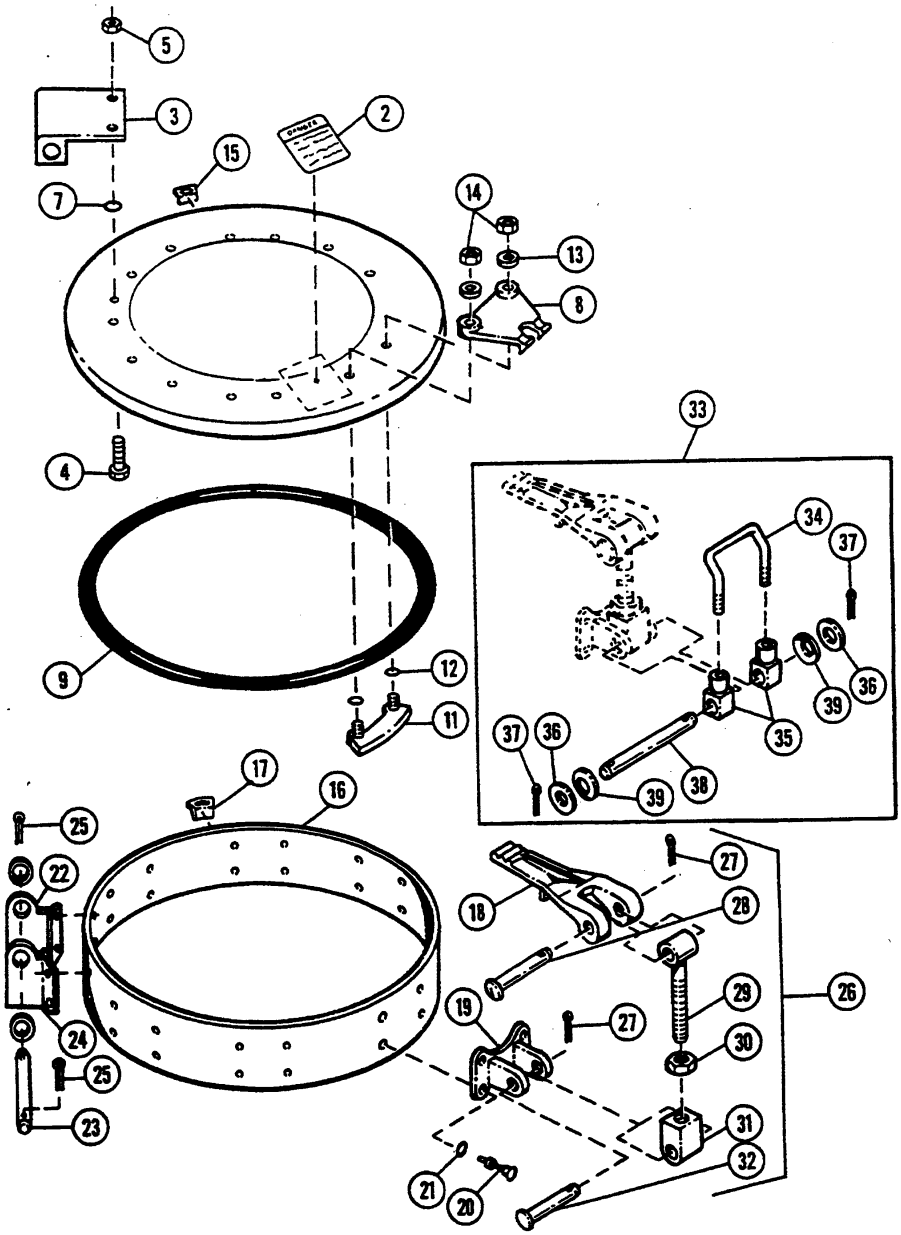

Also found on:

Heil • Polar • Penske • TEC

REF.	PART NO.	DESCRIPTION	REQ'D.
	901-556	COVER ASSEMBLY - (includes items 2 thru 15)	1
1	901-559	COVER	1
2	381-645	DECAL, warning	1
3	902-370	HINGE, upper	1
4	096-905	CAPSCREW - 3/8" - 16NC X 1"	2
5	096-696	NUT, hex. - 3/8" - 16NC	2
7	319-697	O-RING	2
8	070-094	LUG, hold down	6
9	901-603	GASKET, black	1
10	381-717	COVER, old style - 5 hold down - (not shown)	1
11	901-546	LUG, gasket retaining	6
12	319-665	O-RING	12
13	096-687	WASHER, shakeproof - 3/8"	12
14	096-696	NUT, hex. 3/8" - 16NC	12
15	381-977	SEAL CLIP, cover	2
-	900-698	COLLAR ASSEMBLY - (includes items 16 thru 39)	1
16	381-567	COLLAR	1
17	381-576	SEAL CLIP, collar	2
18	070-096	CAM	6
19	070-465	BRACKET, pivot block	6
20	382-888	RIVET - 3/8" x 3/4" flat head	28
21	319-697	O-RING	28
22	381-571	BRACKET, hinge	1
23	384-282	PIN, hinge	1
24	381-572	BRACKET, hinge	1
25	096-242	PIN, cotter - 1/8" x 3/4"	2
26	315-294	HOLD DOWN KIT — (includes items 27 thru 32)	6
27	096-242	PIN, cotter - 1/8" x 3/4"	12
28	070-469	PIN, cam	1
29	070-098	BOLT, eye	1
30	096-241	NUT, jam - 1/2" - 13NC	1
31	070-097	BLOCK, pivot	1
32	070-468	PIN, pivot block	1
33	384-280	SAFETY LATCH KIT - (includes items 34 thru 39)	2
34	384-281	LATCH, safety	1
35	070-097	BLOCK, pivot	2
36	096-657	WASHER, flat - 1/2"	2
37	096-242	PIN, cotter - 1/8" x 3/4"	2
38	384-282	PIN - 1/2" x 5"	1
39	900-010	WASHER, spring	A/R

LM 20" PRESSURE MANHOLE

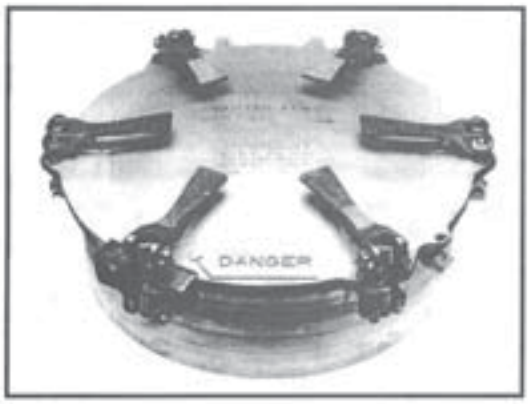

APPLICATIONS:

- SALT
- CEMENT
- DRY FOOD PRODUCTS
- SAND
- CHEMICALS
- CRUDE OIL

MARKETS:

- RAILCAR
- CARGO TANK (Liquid & Dry Bulk)
- INDUSTRIAL
- IBC (Intermodal Bulk Containers)

Features:

- Working Pressure 30psi (MAWP); tested to 47psi
- Standard 6" high weld ring
- 6 quick opening adjustable cam levers provide a positive seal
- Available with various gasket options
- Open rib design in the cover provides strength without hanging up product
- Meets current manhole requirements for MC307 and DOT-407(HM183)

OVERALL HEIGHT: 8 3/4" (Approximately) AVERAGE SHIPPING WEIGHT: 55 lbs (with steel weld ring)

MODEL	COVER MATERIAL		WELD RING		GASKET		VENT	
	#	CONTACT / EXTERNAL PARTS	#	MATERIAL	#	MATERIAL	#	TYPE
LM	1	Aluminum / Plated	0	None	1	Buna N	0	No Vent
	2	Aluminum / 304 SS	1	Alum. 1/4 x 6	2	White Neoprene		
			2	Steel 3/16 x 6	3	Viton		
			3	304 SS 3/16 x 6	4	Teflon Envelope		

KNAPPCO CORPORATION

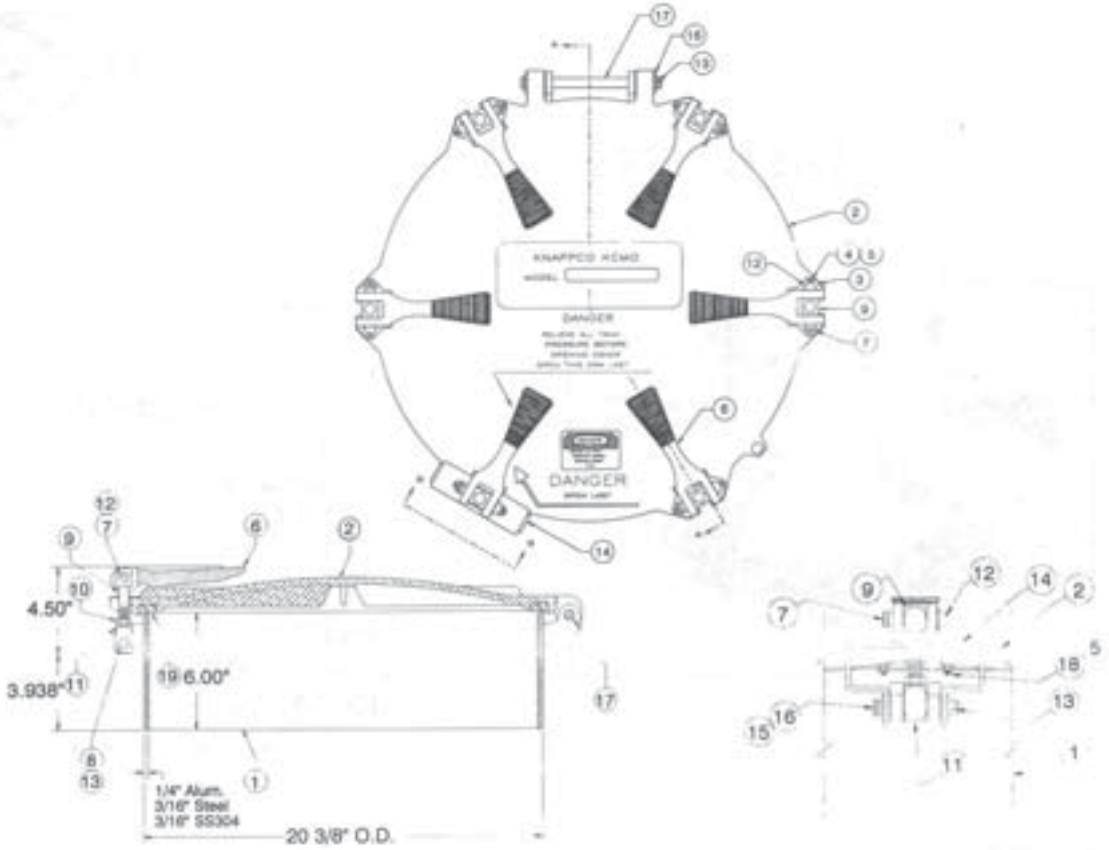

LM 20" PRESSURE MANHOLE

REFERRALS	DESCRIPTION	STEEL	ALUMINUM	PLATED	304 SS	OTHER
1	Weld Ring Assembly	3512	3467		3511	
2	Kit Cover Assembly White Neo.		3581			
	Kit Cover Assembly Black Buna N		3717			
3	Wear Plate (6)				2592	
4	Screws, SS, 10-32 (10)				3546	
5	Nuts, SS, 10-32 (12)				3544	
KIT CAM ASSEMBLY				3519	4111	
6	Cam Lever (6)			3949	3508	
7	Pivot Pin (6) upper			3952	1438	
8	Pivot Pin Lower (5)			5677		
9	Clamp Stud (6)			3439	3700	
10	Jam Nut (6)			1016	1082	
11	Connector (6)			1012	1078	
12	Pal Nut (12)			1020		
13	Cotter Pin			1045	1083	
14	Safety Catch			3686	3513	
15	Safety Catch Pin			3953	1435	
16	Washer (4)			1043	2618	
17	Hinge Pin			3955	3237	
18	Screw - 10-32 x 7/8 (2)				3545	
Gaskets	**Buna N**	**White Neoprene**	**Viton**	**Tef-Env**	**Silicone**	
19	3395	3523	4244	4875	4862	